GeoJournal of Tourism and Geosites
ISSN 2065-1198, E-ISSN 2065-0817

Year XV, vol. 43, no. 3, 2022, p.925-936
DOI 10.30892/gtg.43312-906

STRUCTURAL EQUATION MODEL THE DEVELOPMENT OF THE COVID 19 COMMUNITY RESILIENCE IN PUJON KIDUL TOURISM VILLAGE

Gunawan PRAYITNO*
Brawijaya University, Engineering Faculty, Urban and Regional Planning Department, Malang, Indonesia, e-mail: gunawan_p@ub.ac.id

Ainul HAYAT
Brawijaya University, Faculty of Administrative Science, Malang, Indonesia, e-mail: ainul_h_fia@ub.ac.id

Achmad EFENDI
Brawijaya University, Faculty of Mathematics and Natural Sciences, Malang, Indonesia, e-mail: a_efendi@ub.ac.id

Aidha AULIAH
Brawijaya University, Engineering Faculty, Urban and Regional Planning Department, Malang, Indonesia, e-mail: aidhaauliah@sututdent.ub.ac.id

Amala IKBAR FARRAH
Brawijaya University, Engineering Faculty, Urban and Regional Planning Department, Malang, Indonesia, e-mail: amalafarrah@student.ub.ac.id

Citation: Prayitno G., Hayat, A., Efendi, A., Auliah, A., & Ikbar Farrah, A. (2022). STRUCTURAL EQUATION MODEL THE DEVELOPMENT OF THE COVID 19 COMMUNITY RESILIENCE IN PUJON KIDUL TOURISM VILLAGE. *GeoJournal of Tourism and Geosites*, 43(3), 925–936. https://doi.org/10.30892/gtg.43312-906

Abstract: Pujon Kidul, Malang is a village tourism that offers agricultural potential as a tourist attraction to prosper the communities. Pandemic Covid-19 has caused instability in all sectors, including agricultural sector. The agricultural sector is the last line of defense, but that does not mean the pandemic has no impact on farming activities. On the contrary, the pandemic has slowed global economic growth and social growth, particularly in agriculture; as a result, social capital and local wisdom must be strengthened. As a result, this study was carried out to support Covid-19's Resilience Area in the tourism village of Pujon Kidul by investigating the role of social capital and resilience. Confirmatory Factor Analysis (CFA) and the Structural Equation Model (SEM) were used in this study. We employed structural equation model using AMOS program which the result of the study shows that the residents of Pujon Kidul Village Tourism already have favorable social capital circumstances, which are characterized by a high level of trust among residents and good social network. This trust and social network support the Covid-19 Resilience Village program's effectiveness. So far, the currently used model could explain the relationship between social capital and community resilience.

Key words: pandemic, resilience, social capital

* * * * * *

INTRODUCTION

The role of villages in regional and national development is integral because the number of Indonesians living in villages was 43.3% in 2020 (BPS, 2021). Although the urban population is more significant due to massive urbanization, rural development remains an important element in the regional development process. The goal is that regional development in Indonesia is evenly distributed to the scale of the village. Developing tourism is one strategy to develop a village.

Tourism remains a government priority industry since it is viewed as the locomotive for its economic growth. Tourism has even overtaken palm oil (CPO) and coal exports as the third-largest contributor to national foreign exchange earnings. Therefore, the government continues to strengthen the tourist sector's management through various policies to make Indonesian tourism more advanced and well-known in the world. East Java is one of the provinces that has significant tourism potential, as evidenced by the increasing number of tourism objects from 2016 to 2018, namely 784 tourist sites, including natural, cultural, and artificial tourist attractions (Indah et al., 2021). In addition, Malang Regency is one of the regency tourism villages with a tourist village that is a national tourist destination.

One of the tourist villages in Malang Regency is Pujon Kidul Village, which is located on the west side of the district. The village offers a variety of activities, ranging from agricultural activities, plantations, outdoor activities, and others (Nugraha et al., 2021). The tourism industry is believed to be one of the mainstay sectors of the region to improve people's welfare (Irwan et al., 2021; Pitana and Gayatri, 2005). Concerning agriculture, there is a combined term between tourism and agriculture (Han et al., 2020), namely agrotourism, that introduces related agriculture in tourism packages (Lan and Hung, 2019; Maruti, 2009; Mulyo et al., 2021). Han et al., (2020) found that tourism and agriculture can help to sustain destinations by increasing tourist-stakeholder satisfaction. In addition, agriculture is an essential component of a rural destination's appeal. The development of agrotourism could increase the income of local government (Sulaksana et al., 2021) and has impact to sustainable agriculture (Nugraha et al., 2021).

* Corresponding author

Along with the increasing activity of tourist villages in Pujon Kidul Village, new challenges suddenly occur, namely the COVID-19 pandemic. The tourism sector, an important sector of the Indonesian economy, is also experiencing problems (Utami, 2021). The existence of a policy of limiting activities is to suppress the spread of the virus resulted in the cessation of several sectors supporting the economy. In the tourism sector, the number of visitors is limited, and even many destinations are forced to close and cannot operate. The decline in the tourism sector impacts small and medium businesses and employment. During this time, the tourism sector is a labor-intensive sector that absorbs a lot of labor (Sanaubar et al., 2017) and has impact in tourism industries in Asia-Pacific (Elder and Huynh, 2021). During the COVID-19 epidemic, our previous study demonstrated that social capital could foster reciprocal help and knowledge of community needs (Dewi et al., 2021, Ihsan et al., 2022). After we know the role of social capital, the development of the model of community resilience in dealing with shocks related to pandemics and preparedness for other natural disasters such as floods, threats of volcanic eruptions, and other disasters. Community resilience is a communities' ability to bounce back after a disruption or adversity, a process in which a network of adaptive capacities (resources with dynamic qualities) or linked to adaptation (Nemeth and Olivier, 2017; Norris et al., 2008). Community readiness is the readiness and willingness of the community to take action on an issue or problem (Edward, 2014) and increased community readiness to realize the global village tourism sector should increase the availability of resources, particularly in the tourism sector, and create a positive climate in the community in response to the advancement of information technology (Orbawati et al., 2020).

Community readiness is related to people who have binding dues to respond or react in specific ways to design things. In terms of the economy, pandemics also impact the social conditions of the community (sie.pujonkidul.desa.id, 2020). Local wisdom is a form of community preparedness in the face of disasters; therefore, social capital and local wisdom must be strengthened during the Covid-19 Pandemic (Khotimah et al., 2020; Maskur and Supriatna, 2021). Social capital is the nature of a society that describes the ability of a social group to solve a problem together. Therefore, social capital can direct people to achieve common goals when facing a problem. Based on this explanation, the existence of social capital will be a force for the community to advance in the face of the COVID-19 pandemic. So it is known that good community social capital will be able to realize the development of Covid-19 Resilience Village in Pujon Kidul Village.

MATERIALS AND METHODS

Research Variables

Through social capital, people can deal with the problem of the COVID-19 pandemic through the components of trust, networking, and norms that are in the community. In this study, researchers utilized three social capital variables: trust, network, and norms. The trust measured by indicators: K1 (Level of trust in fellow people); K2 (Level of trust in people of different cultural backgrounds); K3 (Level of trust in the village apparatus or government); K4 (Level of trust in local indigenous leaders); K5 (Level of trust in local religious leaders); K6 (Level of trust in tourism institutions such as BUMDES (village-owned enterprises) or pokdarwis (tourist awareness group); and K7 (Level of communication with others). The variable of social network measured by the indicators: J1 (The level of willingness in building cooperation to achieve mutual success); J2 (Level of participation in religious activities); J3 (Level of participation in community social activities); J4 (Level of activeness in giving opinions); J5 (Level of participation in a group or community). The last variable social network measured by 3 (three) indicators: N1 (The level of adherence to applicable customary norms); N2 (The level of existence of social sanctions); and N3 (Level of attendance in participating in customary activities or events). The answers from the respondents are Likert scale from 1 (strongly disagree), 2 (disagree), 3 (neutral), 4 (agree), and 5 (strongly agreed). Next, there are the resilience variables based on the 5 indicators below (Table 1):

Table 1. Resilience Variables

Variable	Ind.	Information
Community Resilience	R1	Public understanding of Covid-19
	R2	Ease of access to healthcare
	R3	Community involvement in planning and decision-making in Covid-19 recovery activities
	R4	Independence of individuals and communities
	R5	Cooperation between governments institutions, and communities

Sample

The number of populations used in sampling is the head of the family in Pujon Kidul Village as a community representative developing Tangguh Covid-19 Village. Here is a sample calculation using Krejcie-Morgan (Krejcie and Morgan, 1970):

$$S = \frac{x^2.N.P(1-P)}{d^2.(N-1) + x^2.P(1-P)} \qquad S = \frac{3.841 * 125 * 0.5(1-0.5)}{0.05^2 * (1250-1) + 3.841 * 0.5(1-0.5)}$$

$$S = \frac{1200.3125}{4.08725} = 293.64 = 294 \text{ KK}$$

Where: S = Number of Samples; N = Population
P = Proportion of Population (0.5); x^2 = Table Value x^2 (3,841)
d = Degree of Error (0.05)

Therefore, based on the calculation of samples using the Krejcie-Morgan formula, the sample in the study amounted to 294 KK.

METHOD OF COLLECTING DATA

Methods of Analysis

A. Confirmatory Factor Analysis (CFA)

Confirmatory factor analysis is used to obtain indicators that affect social capital variables and indicators that affect

community resilience variables. The CFA analysis of social capital employed in this study makes use of indicators from social capital dimensions such as trust (K), norms (N), and social networks (J). For example, the trust dimension (K) includes indicators such as trust in fellow community members (K1), trust in people from diverse cultural backgrounds (K2), trust in village officials or the government (K3), trust in local community leaders (K4), trust in local religious leaders (K5), trust in tourism institutions such as Pokdarwis (tourist awareness group) (K6), and level of communication with others (K7). Then, on the Norm dimension (N), indicators of conformity to applicable customary norms (N1), the presence of social punishments (N2), and participation in traditional activities or events (N3) are included (N3). Furthermore, the social network dimension (J) contains five indicators: the degree of willingness to cooperate to achieve mutual success (J1); the degree of participation in religious activities (J2); the degree of participation in community social activities (J3); the degree of activeness in expressing opinions (J4); the degree of membership in a group or community (J5).

The results of this CFA analysis stage will be used for the following analysis stage to find out the social capital relationship in the development of the Covid-19 resilient villages in Pujon Kidul Village. The following is a CFA Social Capital analysis of CFA Community Resilience in Pujon Kidul Village.

1. CFA social capital Phase 1 (Figure 1).

CFA analysis phase 1 is the initial stage of testing indicators of social capital trust (K), Norms (N), and social networks (J).

2. CFA social capital Phase 2

Next is to create a CFA analysis model Phase 2 with indicators that have been eliminated earlier r in Phase 1. In Phase 2 of this CFA is carried out, calculations of the new model of social capital are l as follows (Figure 2).

Based on the results of CFA Phase 2, it can be known that three indicators form the Trust dimension (K) with a loading factor value of 0.613 to 0.528.

3. CFA social capital Phase 3 (Figure 3)

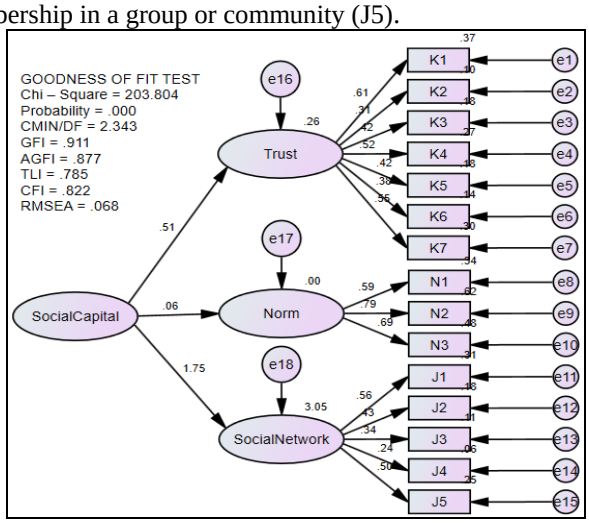

Figure 1. CFA Model of Social Capital Phase 1
(Source: Analysis Results, 2021)

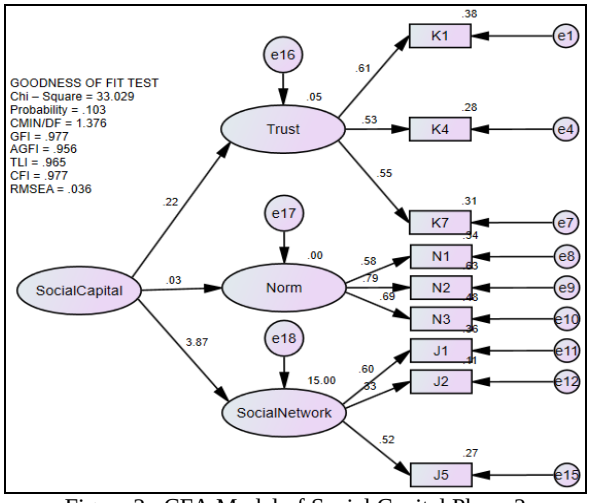

Figure 2. CFA Model of Social Capital Phase 2
(Source: Analysis Results, 2021)

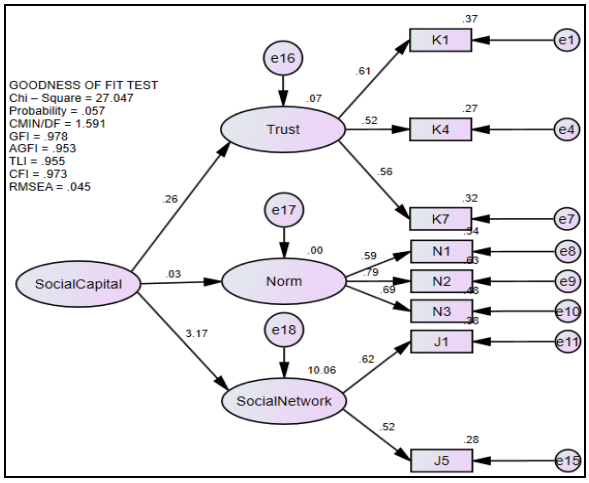

Figure 3. CFA Model of Social Capital Phase 3
(Source: Analysis Results, 2021)

Furthermore, analysis of CFA Community resilience (Figure 4) in this research has indicators of community understanding of Covid-19 (R1), ease of access to health services (R2), community involvement in planning and decision making in Covid-19 recovery activities (R3), individual and community independence (R4), and intergovernmental cooperation with institutions and communities (R5).

1. CFA resilience Phase 1
2. CFA resilience Phase 2

During the first phase of this CFA, the social capital dimension variable indicators were eliminated, including community participation in rehabilitation operations for Covid-19 (R3). Therefore, the path analysis stage 2 results follow after the invalid indicators are deleted (Figure 5).

B. Structural Equation Model (SEM)

SEM can broadly be defined as a multivariate analysis method in describing linear relationships between observational and latent variables. SEM combines SEM analysis with the AMOS software used in the analysis (Ghozali, 2008; Schumacker and Lomax, 2012). PLS or Partial Least Square analysis method with low measurement scale dependency (Prayitno et al., 2021).

The measurements in question include the size and distribution of samples (Sholiha and Salamah, 2015). Here are the steps that need to be done in the preparation of SEM analysis (Haryono, 2016):

1. Reviewing theories, hypotheses, and previous literary research
2. Develop a theoretical framework of thought
3. Develop research model specifications
4. Determine research samples and sample measurements
5. Perform parameter estimation
6. Doing a Goodness of Fit Test or Model Conformity Test
7. Modifying the model
8. Drafting discussions, research suggestions, policy implications, conclusions

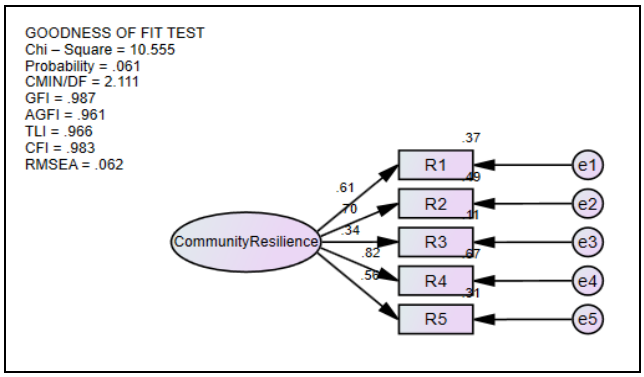

Figure 4. CFA Model of Community Resilience Phase 1
(Source: Analysis Results, 2021)

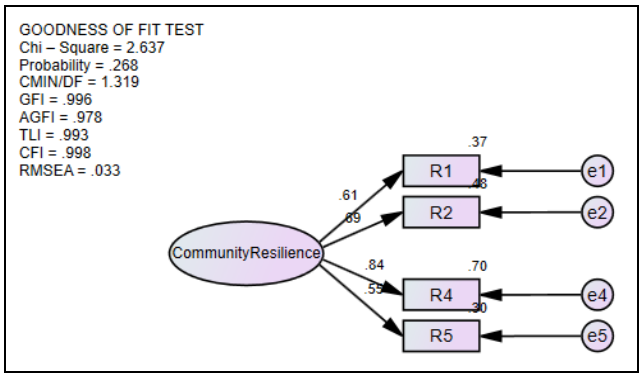

Figure 5. Model CFA Community Resilience Phase 2
(Source: Analysis Results, 2021)

RESULTS AND DISCUSSION

Pujon Kidul village is located in Malang Regency, East Java Province, Indonesia (Figure 6). Pujon Kidul village was selected because it is one of the leading village tourist destinations in Indonesia.

Characteristics of Tourist Village

Pujon Kidul village is currently not only dependent on the agricultural sector but also on the tourism sector. Tourism in Pujon Kidul Village is a fusion activity that utilizes the potential of agriculture as one of the main attractions of village tourism. One of the main attractions or tourist icons of Pujon Kidul Village is Kafe Sawah, located in Krajan Hamlet (Figure 6).

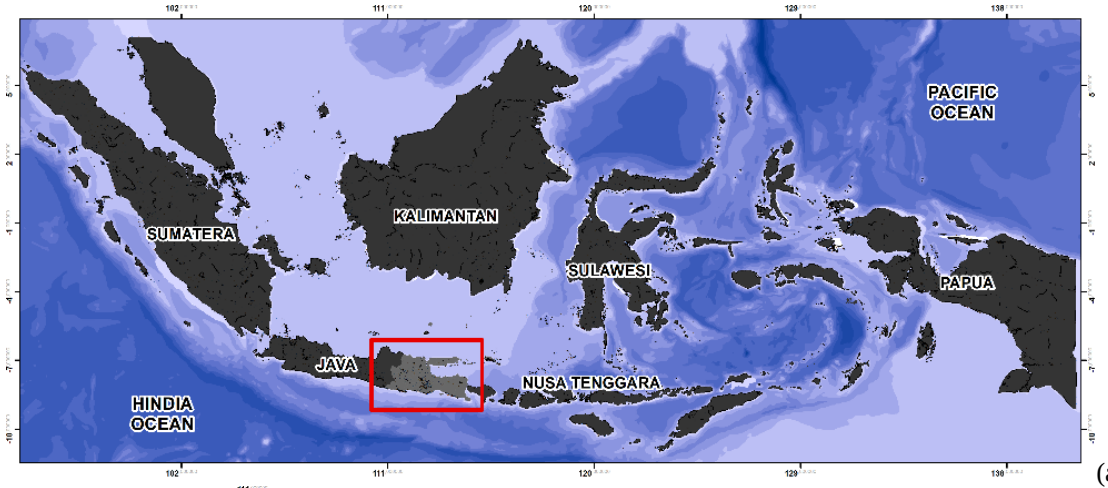

(a)

(b)

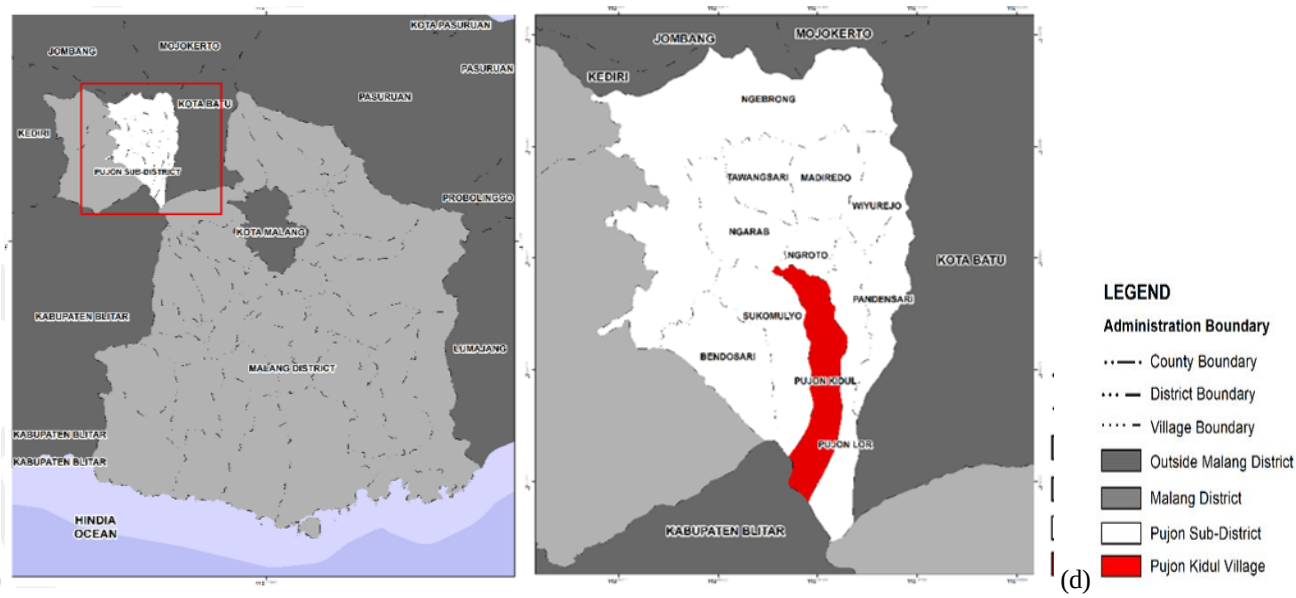

(c) (d)

Figure 6. Map of Study Area: a. East Jawa in Indonesia; b. Malang Regency to East Jawa; c. Map of Malang Regency, the highlighted area shows Pujon Kidul District, and d. Pujon Kidul Villange.

Kafe Sawah is one of the main attractions in Pujon Kidul Village. This tourist attraction offers natural scenery in the form of hills and mountains. Various exciting tourist attractions that can be enjoyed by visitors include the Cafe Sawah area (Figure 7), Fantasy Land, cultural parks, adventure tours, educational tours, and the Rough 78.

The COVID-19 pandemic caused several closures of tourist attractions due to the enactment of PPKM. The impact was that tourism activities stopped, and there was no income from the tourism sector.

Figure 7. Cafe Sawah Pujon Kidul (Source: Primary survey results, 2021)

Characteristics of Agriculture

Pujon Kidul village is one of the tourist villages in the Malang Regency. This village was initially based on agricultural subsystems, so it has considerable agricultural potential. The agricultural sector of Pujon Kidul village is the dominant economic sector for the village community. As many as 39.3% of the residents of Pujon Kidul Village work in agriculture; among them are 1,334 farmers, 194 as farmworkers, and 228 as farmers. From these livelihoods, it is seen that the agricultural sector in Pujon Kidul Village is engaged in the sub-sector of food crops and livestock. The sub-sector of food crops found in Pujon Kidul Village was supported by surface area and cool air. One of the food crops grown in Pujon Kidul Village is rice. Based on the profile data of Pujon Kidul Village in 2019, the area of Kafe Sawah in Pujon Kidul Village is an area of 82.88 ha or 25% of the total area of Pujon Kidul Village. In addition to rice, other food crops such as fruits and vegetables. Based on data from SIE Pujon Kidul in 2019, it can be known that the total area of land planted with vegetables in Pujon Kidul Village is 8.78 ha. Vegetables grown by the people of Pujon Kidul Village include shallots, cauliflower, leeks, carrots, cabbage, white cabbage, mustard greens, and potatoes. The largest vegetable land area is carrot land, with 3.82 ha or 44% of the total land area for vegetable commodities (Figure 8.a). In addition to being planted with vegetables, Pujon Kidul Village also has land planted with fruits to support the village's agricultural sector. The total area of land planted with vegetables in Pujon Kidul Village is an area of 5.66 ha. Fruits grown by the community include chickpeas, tomatoes, chilies, eggplants, oranges, guava, corn, and cucumbers. Based on SIE Data, Pujon Kidul can be known that the largest area of fruit land is land planted with chili with a total percentage of 29%. The chili land consists of cayenne pepper land covering an area of 2.5 ha and land planted with large chili peppers covering an area of 1.75 ha (Figure 8.b).

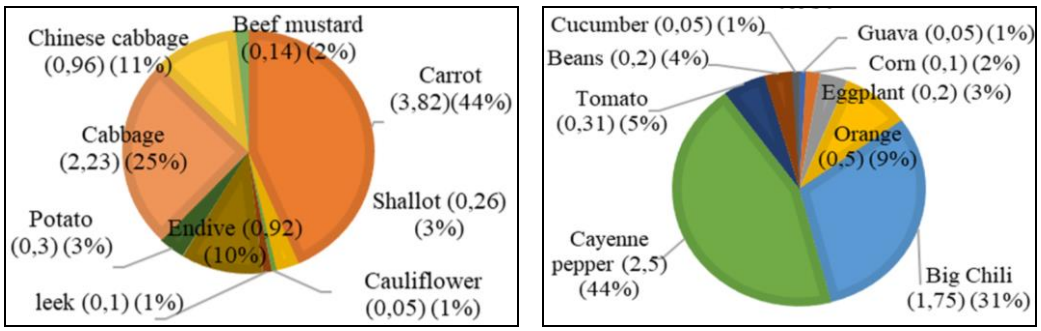

(a) (b)

Figure 8. Percentage of Land Area (a) Vegetables (b) Fruits Area (Source: SIE Pujon Kidul SIE Desa Pujon Kidul, 2021)

Characteristics of Respondents

1. Based on age

Based on the age classification of respondents from Krajan Hamlet, Maron Hamlet, and Tulungrejo Hamlet, it shows that the age of the community is dominated by productive age, or 15–65 years, with a total of 283 people, or 96% of the number of respondents (Figure 9. a).

2. Based on Gender

The number of female respondents was higher (74%) than the number of male respondents (26%) based on the number of men and women that responded (male respondents). This calculation demonstrates that women outnumber men among farmer respondents (Figure 9. b).

3. The level of education

The level of education has a significant influence on the economic well-being of most people working in the agricultural sector. In addition, higher education levels can affect the mindsets of farmers who have the skills to cultivate agriculture more effectively and efficiently.

Based on the education taken by 294 respondents, including Krajan Hamlet, Maron Hamlet, and Tulungrejo Hamlet, it was obtained that community education is very varied, starting from elementary school / MI equivalent to Bachelor. The last level of respondents' education was dominated by SD / MI (elementary school), which amounted to 181 people, or 59% of the number of respondents. However, four people, or 4% of the respondents, did not attend school (Figure 10). This is lower than the average Education in Indonesia, encouraging nine years of primary education. Unfortunately, this causes the ability of the population to be lacking in managing their tourism potential.

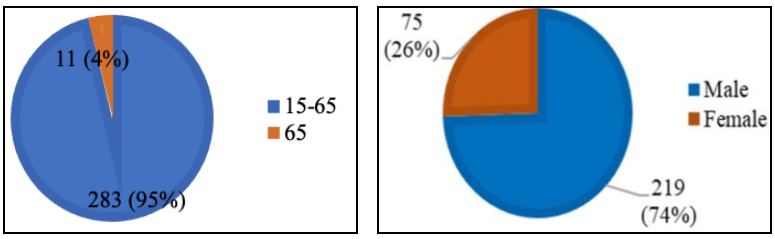

(a) (b)

Figure 9. Characteristics of Respondents (a) Based on Age (b) Based on gender (Source: Primary survey results, 2021)

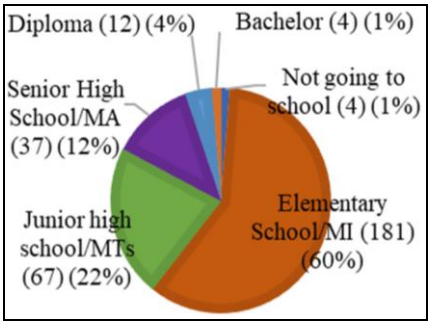

Figure 10. Characteristics of Respondents Based on Education Level (Source: Primary survey results, 2021)

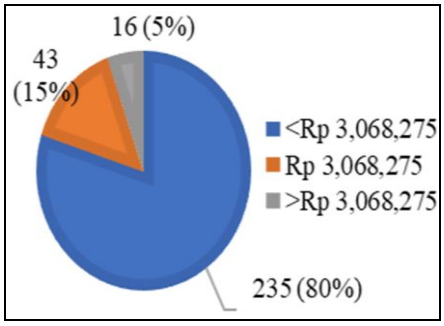

Figure 11. Characteristics of Respondents Based on Income (Source: Primary survey results, 2021)

Table 2. Characteristics of Respondents by Job (Source: Primary survey results, 2021)

Type of work	Number (people)
Workshop	2
Freelance Day Labor	6
Farm labor	**51**
Freelancer	1
Teacher	3
IRT (Housewife)	1
Parking attendant	1
Head of Building	3
Building Porters	8
Merchant	27
Civil servants	2
Private employees	5
Village Devices	2
Timber	1
Farmer	**136**
Breeder	9
Driver	4
Not Working	14
Trail	1
Self-employed	11
Entrepreneurial	6
Total	**294**

4. Based on Work and Income

Income is all receipts in the form of money or goods. Income is closely related to work because it is related to survival (Suroto, 2000). It is known that the community with a job as a farmer is the response and the majority in research on the development of resilient villages Covid-19 in Pujon Kidul Tourism Village. Generally, people who work as farmers 46.2 percent are people who used to have a role in the development of tourist villages, especially Kafe Sawah (Table 2). The domination of income is less than IDR 3,088,275 or less than 205.88 USD (Figure 11).

Characteristics of Social Capital

The social capital characteristics of Pujon Kidul Village can be known through the results of a primary survey in the form of questionnaires that include research variables, namely trust variables, norms, and social networks. In more detail, Table 3 are the variables and indicators used in the social capital research of Pujon Kidul Village:

For all indicators in social capital (trust, norm, and social network), more than 50% agreed and strongly agreed. This respondent's answer shows that most respondents support or have good social capital based on social capital measurement indicators. Furthermore, the level of resilience of the people of Pujon Kidul Village amid the Covid-19 pandemic can be seen in detail in Table 4. According to Table 4, there are only two types of responses in the Five Resilience (R1-R5) indicator: strongly agreeing with 223 individuals or 76 percent of total respondents and agreeing with 71 people or 24 percent of all respondents. The community with the highest proportion of highly agreeing responses dominates the R4 indicator. This value means they view their health and the world around them as a shared responsibility and are always willing to assist neighbors afflicted by the Covid-19 Pandemic. Meanwhile, the second group of responses, agree, demonstrates how people feel a sense of responsibility for their health and the health of their neighbors in the environment and a willingness to assist neighbors afflicted by the Covid-19 outbreak. These findings indicate that the entire community is resilient to the impact of COVID-19 and knows how to deal with it collectively.

Table 3. Characteristics of Social Capital of Pujon Kidul Village (Source: Primary survey results, 2021)

Variable	Indicators	STS (1)		TS (2)		CS (3)		S (4)		SS (5)		Mood
		f	%	f	%	f	%	f	%	f	%	
Trust	K1	0	0%	0	0%	41	5%	70	5%	183	9%	5
	K2	4	27%	10	5%	80	9%	82	6%	118	6%	5
	K3	2	13%	11	6%	63	7%	97	7%	121	6%	5
	K4	0	0%	0	0%	32	4%	111	8%	151	8%	5
	K5	0	0%	0	0%	34	4%	101	7%	159	8%	5
	K6	0	0%	29	15%	69	8%	79	6%	117	6%	5
	K7	2	13%	36	18%	53	6%	99	7%	104	5%	5
Norm	N1	0	0%	5	3%	58	7%	86	6%	145	7%	5
	N2	0	0%	25	13%	66	8%	87	6%	116	6%	5
	N3	0	0%	40	20%	69	8%	79	6%	106	5%	5
Social Network	J1	0	0%	0	0%	29	3%	105	8%	160	8%	5
	J2	0	0%	6	3%	23	3%	110	8%	155	8%	5
	J3	0	0%	0	0%	83	10%	99	7%	112	6%	5
	J4	7	47%	16	8%	83	10%	87	6%	101	5%	5
	J5	0	0%	21	11%	64	8%	91	7%	118	6%	5
Total		**15**		**199**		**847**		**1383**		**1966**		

Where: f = frequency; STS = Strongly disagree; TS = Disagree; CS = Agree enough; S = Agree; SS = Strongly agree

Table 4. Characteristics of Community Resilience of Pujon Kidul Village (Source: Primary survey results, 2021)

Variable	Indicators	STS (1)		TS (2)		CS (3)		S (4)		SS (5)		Mood
		f	%	f	%	f	%	f	%	f	%	
Community Resilience	R1	0	0%	0	0%	5	2%	75	12%	214	35%	5
	R2	0	0%	0	0%	49	22%	231	37%	14	2%	4
	R3	0	0%	0	0%	131	58%	101	16%	62	10%	3
	R4	0	0%	0	0%	0	0%	71	11%	223	36%	5
	R5	0	0%	0	0%	42	19%	153	24%	99	16%	4

Table 5. Results of Significance Test and Validity Test of CFA Social Capital Phase 1(Source: Primary survey results, 2021)

Dimensions	Indicator	C.R.(≥1.96)	P (≤0.05)	Loading Factor (≥0.50)	Information
Trust	K1	Fixed		0.612	Valid
	K2	4.378	***	0.314	Valid
	K3	5.633	***	0.42	Valid
	K4	6.636	***	0.519	Valid
	K5	5.627	***	0.42	Invalid
	K6	5.124	***	0.375	Invalid
	K7	6.9	***	0.549	Valid
Norm	N1	Fixed		0.585	Valid
	N2	7.506	***	0.79	Valid
	N3	7.822	***	0.695	Valid
Social Network	J1	Fixed		0.557	Valid
	J2	5.28	***	0.428	Invalid
	J3	4.396	***	0.338	Invalid
	J4	3.25	0.001	0.238	Invalid
	J5	5.91	***	0.504	Valid

Confirmatory Factor Analysis (CFA) Social Capital

The indicators of social capital variables that are eliminated in phase 1 (Table 5) of the CFA are: the level of trust in people with different cultural backgrounds (K2), the level of trust in local religious leaders (K5), the level of trust in tourism institutions such as pokdarwis (K6), level of participation in religious activities (J2), level of participation in community social

activities (J3), and level of activeness in giving opinions (J4). Next, the indicators that make up social capital in CFA phase 2 include the level of trust in fellow community members (K1), the level of trust in local community leaders (K4), the level of communication with others (K7), the level of obedience to applicable customary norms (N1), the level of existence of social sanctions (N2), the level of attendance in participating in traditional activities or events (N3), a high level of willingness to build cooperation to achieve mutual success (J1), the level of participation in religious activities (J2), and level of participation in a group or community (J5). In phase 2 of this CFA, the new model of social capital calculation is in Table 6.

Table 6. Results of Significance Test and Validity Test of CFA Social Capital Phase 2 (Source: Primary survey results, 2021)

Dimensions	Indicator	C.R.(≥1.96)	P (≤0.05)	Loading Factor (≥0.50)	Information
Trust	K1	Fixed		0.613	Valid
	K4	5.972	***	0.528	Valid
	K7	6.118	***	0.554	Valid
Norm	N1	Fixed		0.585	Valid
	N2	7.494	***	0.794	Valid
	N3	7.831	***	0.691	Valid
Social Network	J1	Fixed		0.601	Valid
	J2	4.143	***	0.334	Invalid
	J5	5.582	***	0.515	Valid

Table 7. Results of Significance Test and Validity Test of CFA Social Capital Phase 3 (Source: Primary survey results, 2021)

Dimensions	Indicator	C.R.(≥1.96)	P (≤0.05)	Loading Factor (≥0.50)	Information
Trust	K1	Fixed		0.61	Valid
	K4	5.791	***	0.52	Valid
	K7	6.019	***	0.565	Valid
Norm	N1	Fixed		0.585	Valid
	N2	7.484	***	0.795	Valid
	N3	7.831	***	0.69	Valid
Social Network	J1	Fixed		0.62	Valid
	J5	5.326	***	0.525	Valid

The variable dimensions of social capital removed in phase 2 of this CFA are the level of participation in religious activities (J2). After the invalid indicators are removed, the phase 2 CFA test is completed, and then the CFA phase 3 retest is carried out by recalculating the model (Table 7). Phase 3 is the final phase of the CFA of social capital, with indicators forming the variable dimensions of social capital, namely the level of trust in fellow community members (K1), the level of trust in local community leaders (K4), the level of communication with others (K7), the level of obedience to the prevailing customary norms (N1), the level of existence of social sanctions (N2), the level of attendance in participating in traditional activities or events (N3), the level of willingness to build cooperation to achieve mutual success (J1), and the level of participation in a group or community (J5). These indicators are said to be indicators that can measure the dimensions of social capital well. So, in the next stage, the feasibility test of the model with the goodness of fit is carried out as follows (Table 8).

Table 8. Goodness Of Fit Test Results on Social Capital CFA Model (Source: Primary survey results, 2021)

The goodness of fit index	Phase 1 CFA			Phase 2 CFA			Phase 3 CFA		
	cut of value	Results	Note	Cut of value	Result	Note	Cut of value	Result	Note
Chi-square	<α.df (α=0.005)	<124.718 (df=87) 203.8	good fit	<a.df (a=0.005)	<45.558 (df=24) 33.0	good fit	<a.df (a=0,005)	<35,718 (df=17) 27,0	good fit
Probabilitas	≥ 0.05	0.000	poor fit	≥ 0.05	0.103	good fit	≥ 0,05	0,057	good fit
CMIN/DF	≤ 2.00	2.343	poor fit	≤ 2.00	1.376	good fit	≤ 2,00	1,591	good fit
GFI	≥ 0.90	0.911	good fit	≥ 0.90	0.977	good fit	≥ 0,90	0,978	good fit
AGFI	≥ 0.90	0.877	poor fit	≥ 0.90	0.956	good fit	≥ 0,90	0,953	good fit
TLI	≥ 0.90	0.785	poor fit	≥ 0.90	0.965	good fit	≥ 0,90	0,955	good fit
CFI	≥ 0.90	0.822	poor fit	≥ 0.90	0.977	good fit	≥ 0,90	0,973	good fit
RMSEA	≤0.08	0.068	good fit	≤0.08	0.036	good fit	≤0,08	0,045	good fit

Based on phase 1, phase 2, and phase 3, there is a change in the goodness of fit value. A goodness of fit feasibility model can be said to be accepted if it has 4-5 goodness of fit indexes that meet the requirements (Suroto, 2000). So, in phase 1, the model is not accepted because it only has three goodness of fit indexes that meet the requirements, or in the first phase CFA model. While phases 2 and 3 are models that can be accepted because all the goodness of fit indexes have met the requirements, The following is the value of the social capital-forming factors in model 3 CFA in Pujon Kidul Village.

1. Trust

The dimension of trust is formed by three indicators, including the level of trust in fellow community members (K1), the level of trust in local community leaders (K4), and the level of communication with others (K7). The equation formed is as follows: K1 = 0.61 Trust + e1; K4 = 0.52 Trust + e4; K7 = 0.565 Trust + e7.

Based on the problems above, it can be seen that the most significant factor loading value is the indicator of the level of trust in fellow community members (K1), with a value of 0.61. An indicator with a significant loading factor value means it has a large effect. Therefore, trust in fellow community members is the most precise indicator in forming trust in Pujon Kidul Village, which is marked by the willingness of the community to help others.

2. Norms

Dimensional norms are formed by three indicators, including the level of adherence to applicable customary norms (N1), the level of social sanctions (N2), and the level of attendance at participating in traditional activities or events (N3). The equation formed is as follows: N1 = 0.585 Norm + e8; N2 = 0.795 Norm + e9; N3 = 0.69 Norm + e10;

Based on the problems above, it can be seen that the largest factor loading value is in the indicator of the level of existence of social sanctions (N2), with a value of 0.795. Therefore, the existence of social sanctions is the clearest indicator in forming norms in Pujon Kidul Village, which is marked by sanctions against the people of Pujon Kidul Village who violate the norms, from receiving a warning, being resolved in a family manner, to being handed over to the authorities.

3. Social Network

The social network dimensions are formed by two indicators, including the level of willingness to build cooperation to achieve mutual success (J1) and the level of participation in a group or community (J5). The equation formed is as follows:

J1 = 0.62 Social Network + e11; J5 = 0.525 Social Network + e15

The biggest loading factor value is in the indicator level of willingness to build cooperation to achieve mutual success (J1), with a value of 0.62. Therefore, the willingness to build cooperation to achieve mutual success is the most influential indicator in forming a social network in Pujon Kidul Village, which is marked by the willingness of the community to work together to achieve common goals without expecting a personal gain.

Confirmatory Factor Analysis (CFA) Community Resilience

A CFA analysis results were carried out in two phases based on the indicators of community resilience (Table 9). Phase 1 of the CFA analysis is the initial stage of testing community resilience indicators in the form of public understanding of COVID-19 (R1), ease of access to health services (R2), community involvement in planning and decision making in COVID-19 recovery activities (R3), individual and community independence (R4), and cooperation between government and institutions and society (R5). The CFA phase 1 test results show that all indicators are significant (Table 10). However, there is 1 invalid indicator: community involvement in planning and decision-making in COVID-19 recovery activities (R3), so it is removed. In phase 2 of the CFA, community resilience makes a CFA analysis model with indicators from the results of CFA phase 1. The indicators that shape community resilience in CFA phase 2 are still the same as before. During the first phase of this CFA, the social capital dimension variable indicators were eliminated, including community participation in rehabilitation operations for Covid-19 (R3). The path analysis stage 2 results are as follows after the invalid indicators are deleted (Table 10). Phase 2 is the final phase of CFA resilience. The forming indicators are said to be indicators that can measure community resilience well. So, in the next stage, the feasibility test of the model with the goodness of fit is carried out as follows (Table 11). This result shows that the community's understanding of COVID-19 influences the resilience of tourist villages. First, the resident could provide the best adaptation on dealing with it, then relate to individual and community resilience. The next is good cooperation between the community and government institutions and good access to health facilities in the village.

Table 9. Results of Significance Test and Validity Test of CFA Community Resilience Phase 1(Source: Primary survey results, 2021)

Dimensions	Indicator	C.R. (≥1.96)	P (≤0.05)	Loading Factor (≥0.50)	Information
Community Resilience	R1	Fixed		0.61	Valid
	R2	8.859	***	0.703	Valid
	R3	4.908	***	0.335	Invalid
	R4	9.239	***	0.819	Valid
	R5	7.558	***	0.559	Valid

Table 10. Results of Significance Test and Validity Test of CFA Community Resilience Phase 2 (Source: Primary survey results, 2021)

Dimensions	Indicator	C.R. (≥1.96)	P (≤0.05)	Loading Factor (≥0.50)	Information
Community Resilience	R1	Fixed		0.609	Valid
	R2	8.787	***	0.69	Valid
	R4	9.112	***	0.836	Valid
	R5	7.473	***	0.549	Valid

Table 11. Goodness Of Fit Test Results on Community Resilience CFA Model (Source: Primary survey results, 2021)

No	The goodness of fit index	Phase 1 CFA			Phase 2 CFA		
		cut of value	Results	Information	cut of value	Results	Information
1	Chi-square	<α.df (α=0.005)	<16.75 (df=5) 10.555	good fit	<a.df (a=0.005)	<10.59 (df=2) 2.637	good fit
2	Probabilitas	≥ 0.05	0.061	good fit	≥ 0.05	0.261	good fit
3	CMIN/DF	≤ 2.00	2.111	poor fit	≤ 2.00	1.319	good fit
4	GFI	≥ 0.90	0.987	good fit	≥ 0.90	0.996	good fit
5	AGFI	≥ 0.90	0.961	good fit	≥ 0.90	0.978	good fit
6	TLI	≥ 0.90	0.966	good fit	≥ 0.90	0.993	good fit
7	CFI	≥ 0.90	0.983	good fit	≥ 0.90	0.998	good fit
8	RMSEA	≤0.08	0.062	good fit	≤0.08	0.033	good fit

The equation formed is as follows.

R1 = 0.609 Community Resilience + e1; R2 = 0.69 Community Resilience + e2;

R4 = 0.836 Community Resilience + e4; R5 = 0.549 Community Resilience + e5

Based on the above problems, it can be seen that the largest factor loading value is in the individual and community independence indicator (R4), namely 0.836.

Analysis Structural Equation Modeling of the Relationship between Social Capital and Community Resilience

This study uses SEM to determine which model is the most appropriate in linking social capital and community resilience dimensions. Models 1 to 3 describe SEM data processing starting from the development of path diagrams, variable significance tests, and goodness of fit model feasibility tests. The following is the result of processing data on the relationship between social capital and community resilience in models 1 to 3.

A. Model 1

1. Development of a Path Diagram

It can be seen (Figure 12) that the dimension of social capital in the form of trust is a variable that affects community resilience in the development of a Covid-19 resilient village in Pujon Kidul Village.

2. Variable Significance Test

In this model, the social network variable influences the trust variable (Table 12). Then on the trust variable, it also affects the community's resilience.

3. Evaluation of Goodness of Fit

A goodness of fit evaluation was conducted to test the feasibility of model 1 of the relationship between social capital and community resilience (Table 13). The table above shows that only one criterion is a good fit. Overall, model 1 is a model that does not fit.

B. Model 2

1. Development of Path Diagrams

In model 2, the path coefficients of social network variables and trust variables directly correlate with norm variables (Figure 13). Furthermore, the norm variable directly relates to the community's resilience variable.

2. Variable Significance Test

In model 2, the trust variable has an effect on the social network variable (Table 14).

3. Evaluation of Goodness of fit

The Table 15, shows that only one criterion is a good fit. Therefore, overall model 2 is also unfit.

C. Model 3

1. Development of Path Diagrams

In Model 3 SEM (Figure 14), it is also described that the path coefficients of trust variables and norm variables have a direct relationship with social network variables.

2. Variable Significance Test

In model 3, the trust variable influences the social network variable (Table 16). Then, on the social network variable, it also affects the community's resilience (C.R$\geq$ 1.96) with p$\leq$0.05 (significant).

3. Evaluation of Goodness of fit

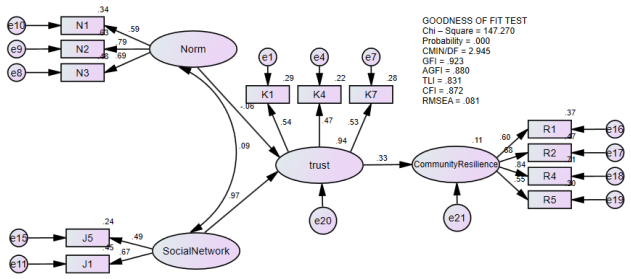

Figure 12. Model 1 Path Diagram (Source: analysis results, 2021)

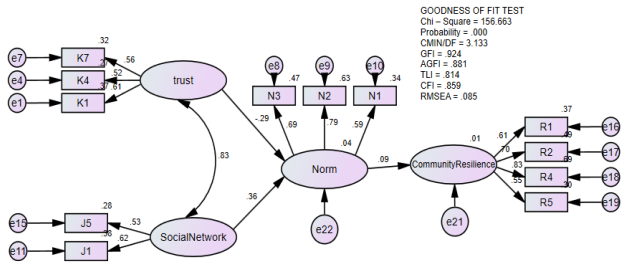

Figure 13. Model 2 Path Diagram (Source: analysis results, 2021)

Table 12. Results of Significance Test Model 1 (Source: analysis results, 2021)

Path coefficient	C.R. (≥1.96)	P (≤0.05)	Loading Factor (≥0.50)	Note
Trust <- Norm	-0.701	0.484	-0.064	Insignificant
Trust <- Social Network	4.899	***	0.974	Significant
Community Resilience <- Trust	3.627	***	0.328	Significant
Norm <-> Social Network	0.991	0.322	0.092	Insignificant

Table 13. Results of Goodness of fit Model 1 (Source: analysis results, 2021)

Goodness of fit index	cut of value	Results	Note
Chi-square	<a.df (a=0.005)	<79.489 (df=50) 147.270	poor fit
Probabilitas	≥ 0.05	0.000	poor fit
CMIN/DF	≤ 2.00	2.945	poor fit
GFI	≥ 0.90	0.923	good fit
AGFI	≥ 0.90	0.880	poor fit
TLI	≥ 0.90	0.831	poor fit
CFI	≥ 0.90	0.872	poor fit
RMSEA	≤0.08	0.081	poor fit

Table 14. Results of Significance Test Model 2 (Source: analysis results, 2021)

Path coefficient	C.R. (≥1.96)	P (≤0.05)	Loading Factor (≥0.50)	Note
Trust <- Norm	-0.904	0.366	-0.289	Insignificant
Trust <- Social Network	1.078	0.281	0.362	Insignificant
Community Resilience <- Trust	1.178	0.239	0.089	Insignificant
Norm <-> Social Network	5.539	***	0.825	Significant

There are four criteria for a good fit in Table 17, so overall, model 3 is a fit or acceptable (Haryono, 2016). Acceptance of the third model means that the COVID-19 resilience village can be done by increasing trust among community members and strengthening networks. The model shows that the better the network, the community has various relationships with other parties in tackling COVID-19. According to the results of the SEM analysis and the state of the exhibition, the residents of Pujon Kidul

Village Tourism already have favorable social capital circumstances, which are characterized by a high level of trust, norms, and social network. This is trust and social network to support the Covid-19 Resilience Village program's effectiveness.

Table 15. Results of Goodness of fit Model 2
(Source: analysis results, 2021)

The goodness of fit index	cut of value	Results	Note
Chi-square	<a.df (a=0.005)	<79.489 (df=50) 156.663	poor fit
Probability	≥ 0.05	0.000	poor fit
CMIN/DF	≤ 2.00	3.133	poor fit
GFI	≥ 0.90	0.924	good fit
AGFI	≥ 0.90	0.881	poor fit
TLI	≥ 0.90	0.814	poor fit
CFI	≥ 0.90	0.859	poor fit
RMSEA	≤0.08	0.85	poor fit

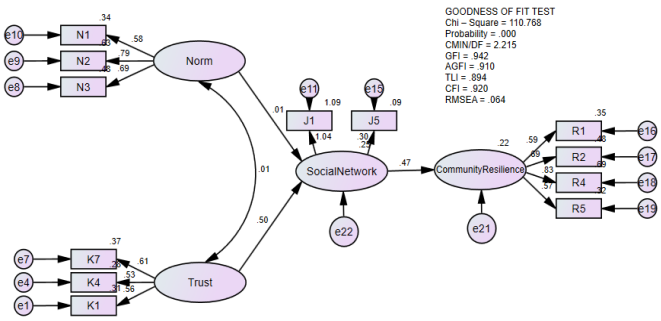

Figure 14. Model 3 Path Diagram (Source: analysis results, 2021)

Table 16. Results of Significance Test Model 3

Path coefficient	C.R. (≥1.96)	P (≤0.05)	Loading Factor (≥0.50)	Note
Trust <- Norm	0.147	0.884	0.009	Insignificant
Trust <- Social Network	5.467	***	0.502	Significant
Community Resilience <- Trust	3.944	***	0.473	Significant
Norm <-> Social Network	0.078	0.938	0.007	Insignificant

Table 17. Results of the Goodness of Fit Model 3

Goodness of fit index	cut of value	Results	Note
Chi-square	<a.df (a=0.005)	<79.489 (df=50) 110.768	poor fit
Probabilitas	≥ 0.05	0.000	poor fit
CMIN/DF	≤ 2.00	2.215	poor fit
GFI	≥ 0.90	0.945	good fit
AGFI	≥ 0.90	0.910	good fit
TLI	≥ 0.90	0.894	poor fit
CFI	≥ 0.90	0.920	good fit
RMSEA	≤0.08	0.64	good fit

Structural Equation Model of The Development of The Covid 19 Community Resilience

Using Structural Equation Model (SEM), we determined the link between social capital and community resilience in Pujon Kidul Village, a Covid-19 resilient community. Model 3 is a model that can determine the relationship between social capital and community resilience in the development of COVID-19 resilient in Pujon Kidul Village Tourism. The SEM discussion created three alternative models to see the relationship between social capital and community resilience in developing COVID-19 resilient villages (model 1-3). Model 3's path diagram and significance test show that social capital and community resilience are linked through the Social Network variable in establishing COVID-19 resilient communities. In line with (Guarnacci, 2016) finding that social network has relation to community resilient in the case of Aceh Province-Indonesia. With a minor influence or loading factor value of 0.009, the norm variable is directly linked to the social network variable with a negligible value. However, the trust variable has a strong influence or loading factor of 0.502 or 50.2 percent on the social network variable. As a result, it can be said that in Pujon Kidul Village, trust in fellow community members (K1), trust in local leaders (K4), and communication with others (K7) have a significant relationship and effect of 50.2 percent on social networks. This is characterized by the willingness to build cooperation to achieve mutual success (J1). The community-owned social network has a strong influence or loading factor value of 0.473 or 47.3% on the community's resilience variable. Therefore, it can be said that the social network owned by the community has a significant relationship and has an effect of 47.3% on community resilience in developing resilient villages, as evidenced by their willingness to build cooperation for mutual success (J1) and participation in a group or community (J5). People in Pujon Kidul Village are more informed about Covid-19 (R1), have better access to health services (R2), and are more self-sufficient (R4) as a result of Covid-19.

CONCLUSION

The conclusions from the research are as follows:

1. The results of CFA Social capital analysis are carried out in 3 phases, where all indicators are significant and valid in phase 3. This is because the indicator has met the testing requirements, which can be said to be valid if it has a loading factor value of 0.5, and is said to be significant if it has a C.R value of 1.96 and a P value of 0.05, which are marked with *** in the table. Thus, there is no need to eliminate or reduce indicators because all indicators are valid and significant.
2. The CFA Community Resilience analysis results show that the indicators that best describe the resilience of the Pujon Kidul Village community are: (R1) the community's understanding of COVID-19; R1 (ease of access to health services); R3 (Independence of individuals and communities); and R4 (cooperation between government institutions and the community. This result shows that the community's understanding of COVID-19 influences the resilience of tourist villages. First, the resident could provide the best adaptation on dealing with it, then relate to individual and community resilience. The next is good cooperation between the community and government institutions and good access to health facilities in the village.
3. The test results of the three models show that models 1 and 2 only have one goodness of fit index criteria that matches the cut-off value. Meanwhile, model 3 has four goodness of fit index criteria that meet the cut-off value requirements. So, model 3 is the best model for describing the relationship between social capital and community resilience in developing the Covid-19 Resilience Village in Pujon Kidul Village. According to the results of the SEM analysis and the state of the exhibition, the residents of Pujon Kidul Village Tourism already have favorable social

capital circumstances, which are characterized by a high level of trust, norms, and social network. This trust and social network support the Covid-19 Resilience Village program's effectiveness. So far, the currently used model (Model 3) could explain the relationship between social capital and community resilience.

Acknowledgment

This research funded by Hibah Penelitian Tematik Covid Integrated Research (CIR-1), Contract Number 1205.7/UN10.C10/PN/2021 (LPPM Universitas Brawijaya).

REFERENCES

Dewi, P., Prayitno, G., & Dinanti, D. (2021). Social Capital of the Pujon Kidul Tourism Village Community in Facing the Covid-19 Pandemic. *GeoJournal of Tourism and Geosites*, *38*(4), 1239–1246. https://doi.org/10.30892/gtg.38431-765

Ihsan, Y.N., Purba, N.P., Faizal, I., Anya, A., Mulyani, P.G., Anwar, S.K., (2022). Impact of the Pandemic Covid-19 to the Indonesia Seas. *GeoJournal of Tourism and Geosites*, 40(1), 30–6. https://doi.org/10.30892/gtg.40103-799

Edward, R.W. (2014). Community Readiness for Community Change. *Colorado State University*.

Elder, S., & Huynh, P. (2021). *ILO Brief: COVID-19 and employment in the tourism sector in the Asia–Pacific region* (Issue November). https://www.ilo.org/wcmsp5/groups/public/---asia/---ro-bangkok/documents/briefingnote/wcms_827495.pdf

Ghozali, I. (2008). Structural Equation Modeling, *Metode Alternatif dengan Partial Least Square* (Alternative Method with Partial Least Square),. *Badan Penerbit Universitas Diponegoro, Semarang*.

Guarnacci, U. (2016). Joining the dots: Social networks and community resilience in post-conflict, post-disaster Indonesia. *International Journal of Disaster Risk Reduction*, *16*, 180–191. https://doi.org/https://doi.org/10.1016/j.ijdrr.2016.03.001

Han, G., Akhmedov, A., Li, H., Yu, J., & Hunter, W.C. (2020). An interpretive study on sustainability in the link between agriculture and tourism: Tourist-stakeholder satisfaction in Tiantangzhai, China. *Sustainability (Switzerland)*, *12*(2). https://doi.org/10.3390/su12020571

Haryono, S. (2016). *Metode SEM Untuk Penelitian Manajemen dengan AMOS 22.00, LISREL 8.80 dan Smart PLS 3.0. In Lisrel, Amos* (SEM Method for Management Research with AMOS 22.00, LISREL 8.80 and Smart PLS 3.0. In Lisrel, Amos).

Indah, F.R., Nuraini, I., & Syaifullah, Y. (2021). *Pengaruh Sektor Pariwisata Terhadap Penyerapan Tenaga Kerja Di Provinsi Jawa Timur Tahun 2012-2018* (The Influence of the Tourism Sector on Labor Absorption in East Java Province in 2012-2018). *Jurnal Ilmu Ekonomi JIE*, 5(2), 339-353. https://doi.org/10.22219/jie.v5i2.1.

Irwan, A.A., Adam, A., & Upe, A. (2021). Community Empowerment Strategy towards a Sustainable Rural Community-based Tourısm Village. *Turkish Online Journal of Qualitative Inquiry (TOJQI)*, 12(5), 2065–2076.

Khotimah, K., Sarmini, S., & Imron, A. (2020). Family Based Social Capital In Handling Of Covid-19 Prevention In Blitar District. *Jurnal Partisipatoris*. https://doi.org/10.22219/jp.v2i2.12975

Krejcie, R.V., & Morgan, D.W. (1970). Determining sample size for research activities. *Educational and Psychological Measurement*, *30*(3), 607–610.

Lan, M.Y., & Hung, T.A. (2019). The Impact of Leisure Agriculture on Package Group Tours: A China's New Tourism Laws Perspective. *OALib*, *06*(02), 1–9. https://doi.org/10.4236/oalib.1105141

Maruti, K.V. (2009). Agrotourism: Scope and Opportunities for the Farmers in Maharashtra. *Article Report. Dept. Of Economics, Y.C College. Pachwad Talwai, Dist-Satara, State Maharashtra*.

Maskur, T., & Supriatna, A. (2021). Strengthening Social Capital Through Social Economic Mitigation Based on Local Wisdom. *Proceedings of the 5th Global Conference on Business, Management and Entrepreneurship (GCBME 2020)*, *187*(Gcbme 2020), 1–5. https://doi.org/10.2991/aebmr.k.210831.001

Mulyo, J.H., Rohmah, F., Perwitasari, H., & Nasir, M.A. (2021). The Service Quality of Kampoeng Kopi Banaran Agrotourism, Central Java Province, Indonesia. *IOP Conference Series: Earth and Environmental Science*. https://doi.org/10.1088/1755-1315/662/1/012003

Nemeth, D.G., & Olivier, T.W. (2017). *Chapter 4 - Community Resilience: Baton Rouge—A Community in Crisis—Grieving and Moving Forward* (D.G. Nemeth & T.W.B.T.I.A. to I. & C.R. Olivier, 59–76. Academic Press. https://doi.org/https://doi.org/10.1016/B978-0-12-803851-2.00004-0

Norris, F.H., Stevens, S.P., Pfefferbaum, B., Wyche, K.F., & Pfefferbaum, R.L. (2008). Community resilience as a metaphor, theory, set of capacities, and strategy for disaster readiness. *American Journal of Community Psychology*, *41*(1–2), 127–150. https://doi.org/10.1007/s10464-007-9156-6

Nugraha, A.T., Prayitno, G., Hasyim, A.W., & Roziqin, F. (2021). Social capital, collective action, and the development of agritourism for sustainable agriculture in rural Indonesia. *Evergreen*, *8*(1), 1–12. https://doi.org/10.5109/4372255

Orbawati, E., Sujatmiko, Fadlurrahman, & Fauziah, N. (2020). Village Community Readiness In Estabilishing A Global Village. *Jurnal Ilmu Sosial*, *19*(1), 58–91. https://doi.org/10.14710/jis.19.1.2020.58

Pitana, G.I., & Gayatri, P.G. (2005). *Sosiologi Pariwisata* (Tourism Sociology). *Yogyakarta: CV Andy Offset*.

Prayitno, G., Ahari, M.I., & Rukmi, W.I. (2021). Structural equation model with partial least square (SEM-PLS) of place dependence with land used change. *Journal of International Studies*, *14*(1), 153–171. https://doi.org/10.14254/2071-8330.2021/14-1/11

Sanaubar, G, Hidayat, W., & Kusuma, H. (2017). *Pengaruh Potensi Pariwisata TerhadapPenyerapan Tenaga Kerja Sektor Perhotelan Di 9 Kabupaten/Kota Provinsi Jawa Timur Tahun 2012-2015* (The Effect of Tourism Potential on Labor Absorption in the Hospitality Sector in 9 Regencies/Cities of East Java Province in 2012-2015). *Jurnal Ilmu Ekonomi, 1(3),324–339*.

Schumacker, R., & Lomax, R.G. (2012). *A Beginner's Guide to Structural Equation Modelling.* Routledge, Taylor and Francis Group.

Sholiha, E.U., & Salamah, M. (2015). Structural Equation Modeling-Partial Least Square untuk Pemodelan Derajat Kesehatan Kabupaten/Kota di Jawa Timur (Studi Kasus Data Indeks Pembangunan Kesehatan Masyarakat Jawa Timur 2013). *Jurnal Sains Dan Seni ITS*, *4*(2), 169–174.

Sulaksana, J., Sudirno, D., & L.M, L.S. (2021). Development of Agrotourism and Its Impact on Regional Tax Revenue. *MIMBAR : Jurnal Sosial Dan Pembangunan*, *37*(1), 88–100. https://doi.org/10.29313/mimbar.v37i1.6602

Suroto (2000). *Strategi Pembangunan dan Perencanaan Kesemapatan Kerja* (Development Strategy and Job Opportunity Planning). *Yogyakarta: Universitas Gajah Mada*.

Utami, B. (2021). *Sektor Pariwisata Indonesia di Tengah Pandemi Covid-19* (Indonesia's Tourism Sector in the Midst of the Covid-19 Pandemic).

***BPS. (2021). *Kecamatan Pujon Dalam Angka (*Pujon Kidul in Figures*)*.

*** Rapat Koordinasi Tentang Dampak Virus Covid 19. (2020). sie.pujonkidul.desa.id. *Https://Www.Sie.Pujonkidul.Desa.Id/Berita.Php. Diakses Pada Juni 08, 2021*.

*** SIE Desa Pujon Kidul. (2021). *Laporan Finansial BumDesa Pujon Kidul* (BumDesa Pujon Kidul Financial Report).

Article history: Received: 26.01.2022 Revised: 08.06.2022 Accepted: 18.07.2022 Available online: 11.08.2022